ARTWORK APPROVAL FORM

ORDER DETAILS		ITEM DETAILS		MATERIAL COLOURS				LAMINATION
ORDER NUMBER:	X	FABRIC:	X	FABRIC:	☐ WHITE	X:	☐ X	SHINY / MATT
ITEM CODE:	MO4340	GRAMMAGE:	X	HANDLE REF. COLOUR:	☐ X	X:	☐ X	
QUANTITY:	X	HANDLE:	80 gsm NON-WOVEN	CLOSURE:	☐ X	X:	☐ X	
ITEM SIZE:	45 x 35 x 10 cm	HANDLE SIZE:	60 x 2.5 cm	X	☐ X	X:	☐ X	
		X:	X	X	☐ X	X:	☐ X	

SCALE 1:10

FRONT
TECHNIQUE -
LOGO -
SIZE -

ATTENTION 1

BACK
- TECHNIQUE
- LOGO
- SIZE

ATTENTION 1

LEFT SIDE
TECHNIQUE -
LOGO -
SIZE -

ATTENTION 1

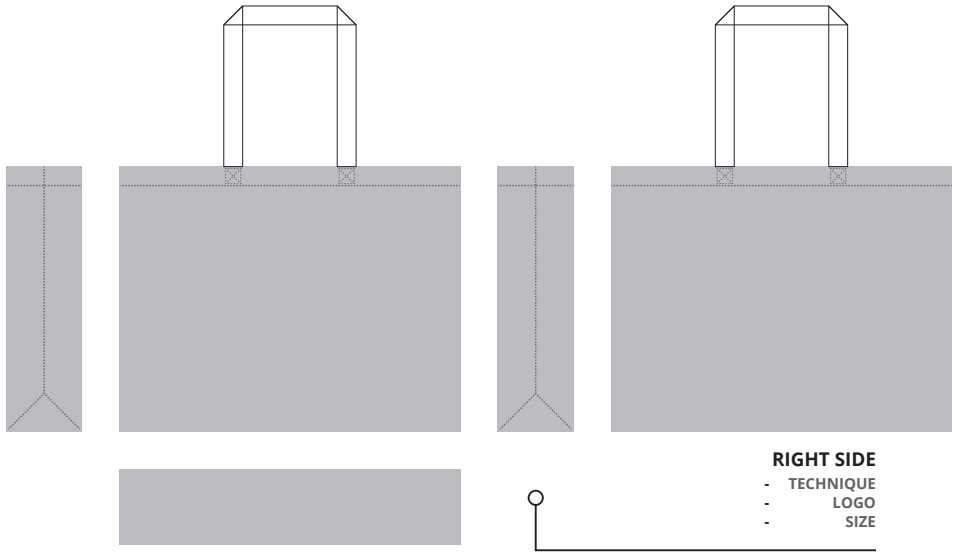

RIGHT SIDE
- TECHNIQUE
- LOGO
- SIZE

ATTENTION 1

BOTTOM
TECHNIQUE -
LOGO -
SIZE -

ATTENTION 1

yourChoice

GENERAL COMMENT:

GENERAL COMMENT:

ATTENTION 1:

ATTENTION 2:

MO4340

HORIZONTAL HEAT SEALED SHOPPING BAG

Item size:	45 x 35 x 10 cm
Handle:	80 gsm Non - Woven
Handle size:	60 x 2.5 cm
Techniques:	Full Colour only for laminated Offset only for laminated Silkscreen only for NW (max. 15 x 20 cm)

SCALE 1:1

FABRIC - STANDARD COLOUR

WHITE

FABRIC - TYPES

NON WOVEN WITH LAMINATION (120 gsm)

NON WOVEN (80 gsm)

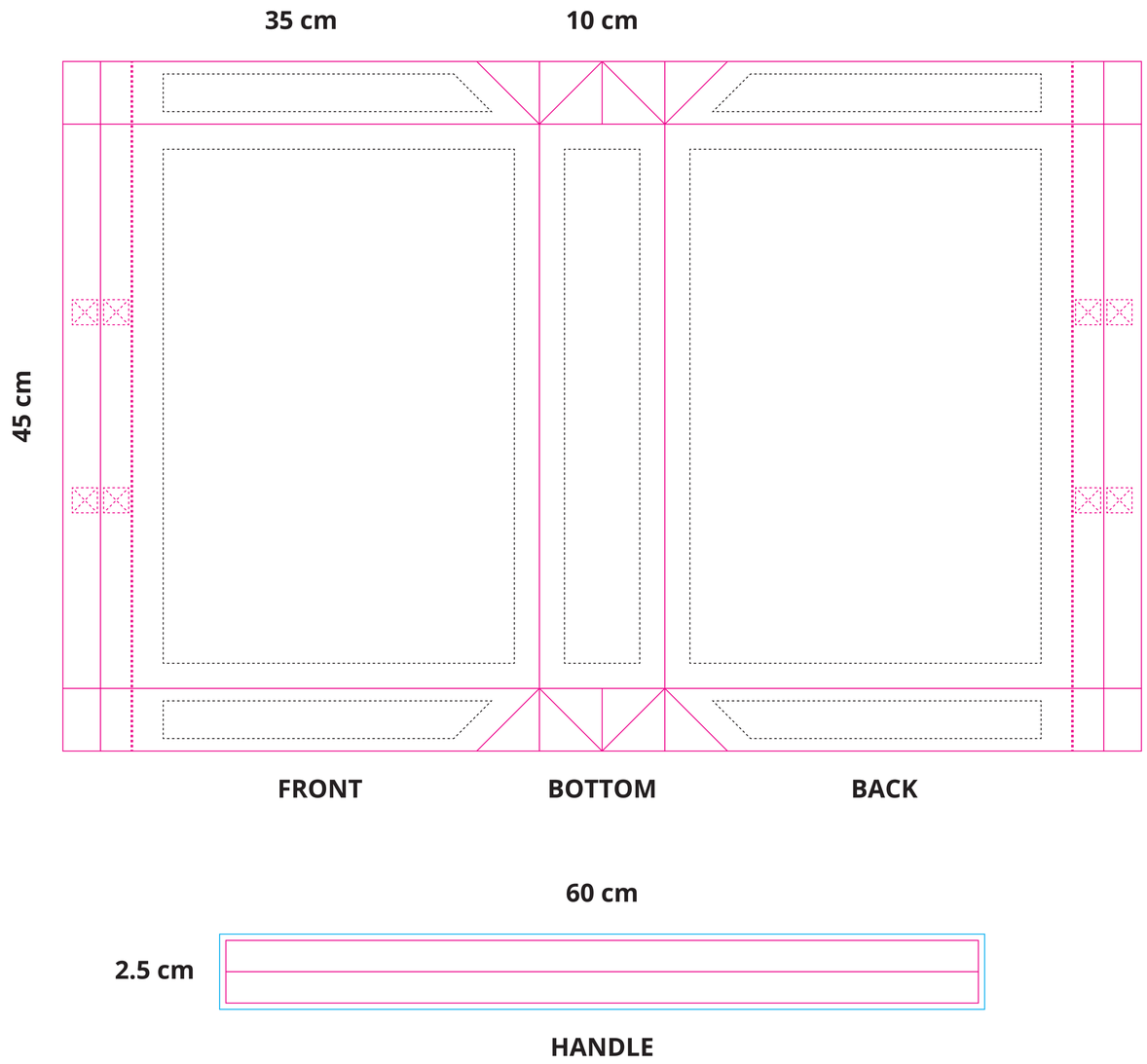

LEGEND:

- BLEED AREA
- FINISHED COMPONENT
- HEAT SEAL
- SAFE PRINT AREA