# ARTWORK APPROVAL FORM

**ORDER DETAILS**

| | |
|---|---|
| ORDER NUMBER: | X |
| ITEM CODE: | MH2003 |
| QUANTITY: | X |

**ITEM DETAILS**

| | |
|---|---|
| FABRIC: | PREMIUM COTT. TWILL |
| GRAMMAGE: | 260 gsm |
| ITEM SIZE: | STANDARD |
| CLOSURE: | HOOK AND LOOP / METAL BUCKLE |
| X: | / SUNDAY BUCKLE |

**MATERIAL COLOURS**

| | | | | | | | |
|---|---|---|---|---|---|---|---|
| PANELS: | ☐ X | BUTTON: | ☐ X | VISOR TOP: | ☐ X |
| BUCKLE: | ☐ X | EYELETS: | ☐ X | VISOR BOTTOM: | ☐ X |
| X: | ☐ X | STITCHES: | ☐ X | SWEATBAND: | ☐ X |
| X: | ☐ X | SANDWICH: | ☐ X | SEAM TAPE: | ☐ X |
| X: | ☐ X | STRAP: | ☐ X | X: | ☐ X |

SCALE 1:5

**FRONT**
TECHNIQUE -
LOGO -
SIZE -
ATTENTION 1

**BACK**
- TECHNIQUE
- LOGO
- SIZE
ATTENTION 1

**SANDWICH**
TECHNIQUE -
LOGO -
SIZE -
ATTENTION 1

**STRAP / BUCKLE**
- TECHNIQUE
- LOGO
- SIZE
ATTENTION 1

**LEFT SIDE**
TECHNIQUE -
LOGO -
SIZE -
ATTENTION 1

**RIGHT SIDE**
- TECHNIQUE
- LOGO
- SIZE
ATTENTION 1

**SEAM TAPE**
- TECHNIQUE
- LOGO
- SIZE
ATTENTION 1

**VISOR TOP**
TECHNIQUE -
LOGO -
SIZE -
ATTENTION 1

**VISOR BOTTOM**
- TECHNIQUE
- LOGO
- SIZE
ATTENTION 1

yourChoice

GENERAL COMMENT:

GENERAL COMMENT:

ATTENTION 1:

ATTENTION 2:

# MH2003

## PREMIUM COTTON TWILL BASEBALL CAP

Panels: 6
Profile: Medium
Fabric: Premium cotton twill
Grammage: 260 gsm
Sandwich: Yes

Other info.: Pre-curved visor, hook and loop closure, cotton sweatband.

SCALE 1:1

## PREMIUM COTTON TWILL - STANDARD COLOURS

| | |
|---|---|
| WHITE | 2597 C |
| BLACK | 2092 C |
| 208 C | 4149 C |
| 3517 C | 2142 C |
| 2349 C | 305 C |
| 7598 C | 3115 C |
| 213 C | 3005 C |
| 183 C | 2144 C |
| 496 C | 4142 C |
| 1635 C | 294 C |
| 172 C | 4154 C |
| 1375 C | 534 C |
| 1235 C | 296 C |
| 7410 C | 2159 C |
| 107 C | 2157 C |
| 2309 C | 7472 C |
| WARM GRAY 1 C | 5575 C |
| 7530 C | 2404 C |
| 2311 C | 375 C |
| 4269 C | 364 C |
| 7574 C | 7763 C |
| 476 C | 417 C |
| COOL GRAY 11 C | 5815 C |
| 4276 C | 4210 C |
| 4281 C | 336 C |

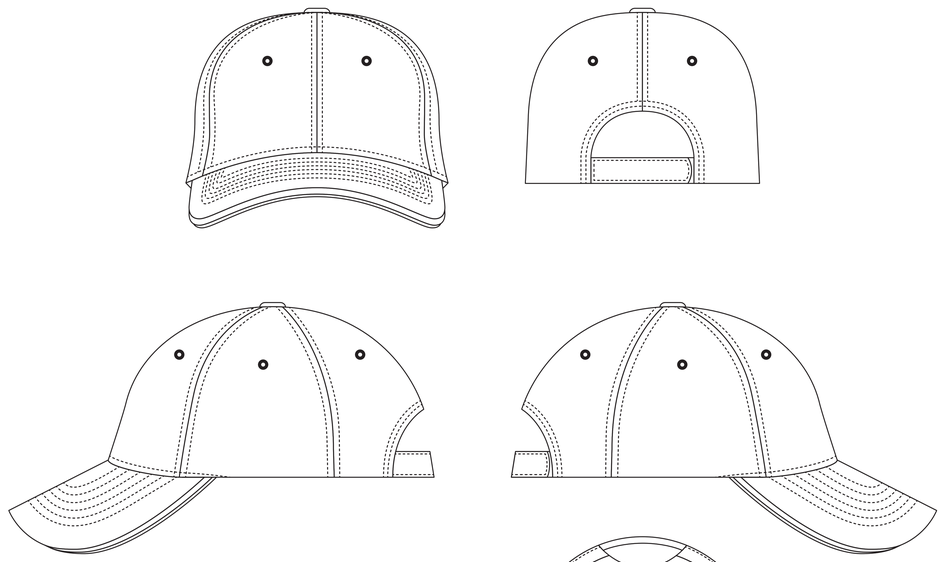

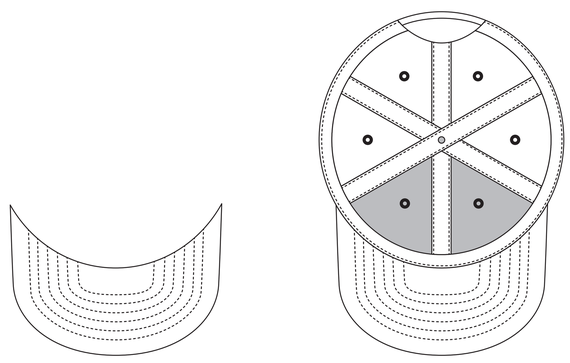

VISOR TOP

INSIDE

## STANDARD CLOSURE:

HOOK AND LOOP CLOSURE

## OPTIONAL CLOSURE:

SUNDAY BUCKLE (SHINY NICKEL)

SUNDAY BUCKLE (MATT NICKEL)

METAL BUCKLE WITH TUCK IN SLIT (SHINY NICKEL)

METAL BUCKLE WITH TUCK IN SLIT (MATT NICKEL)

## INSIDE PARTS:

SEAM TAPE - WIDTH 1,5 cm (FRAGMENT)

SWEATBAND - WIDTH 3 cm