ARTWORK APPROVAL FORM

ORDER DETAILS		ITEM DETAILS		MATERIAL COLOURS				
ORDER NUMBER:	X	FABRIC:	X	FABRIC:	☐	NATURAL / WHITE / X	X:	☐ X
ITEM CODE:	MB8104	GRAMMAGE:	X	HANDLE:	☐	NATURAL / WHITE / X	X:	☐ X
QUANTITY:	X	HANDLE:	SELF MATERIAL	STITCHES:	☐	MATCHING	X:	☐ X
ITEM SIZE:	38 x 42 x 10 cm	HANDLE SIZE:	70 x 2.5 cm	X:	☐	X	X:	☐ X
		X:	X	X:	☐	X	X:	☐ X

SCALE 1:10

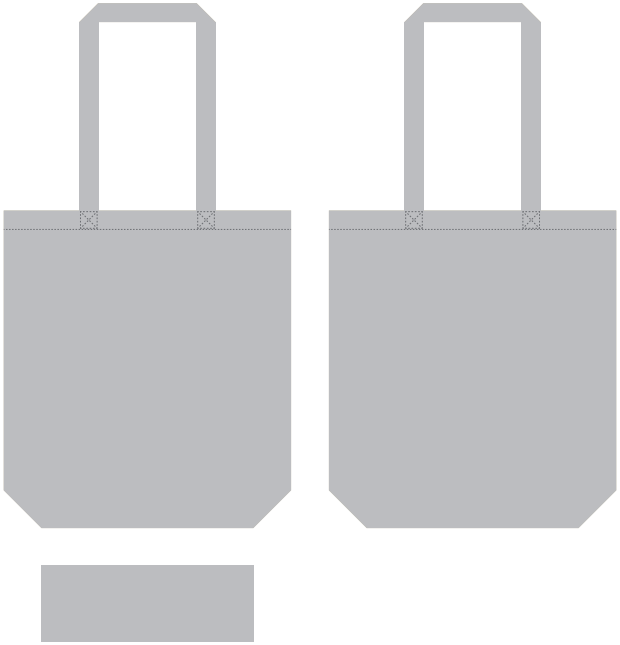

FRONT
TECHNIQUE -
LOGO -
SIZE -

ATTENTION 1

BACK
- TECHNIQUE
- LOGO
- SIZE

ATTENTION 1

BOTTOM
TECHNIQUE -
LOGO -
SIZE -

ATTENTION 1

yourChoice

GENERAL COMMENT:

GENERAL COMMENT:
PLEASE NOTICE THAT THE LOGO POSITIONING ON THE FRONT CAN NOT BE ALIGNED EXACTLY WITH THE DESIGN ON THE BACK.

ATTENTION 1:

ATTENTION 2:

MB8104

COTTON SHOPPING BAG

Fabric:	Cotton (140 gsm) Organic cotton (140 gsm) Cotton (180 gsm) Organic cotton (180 gsm) Cotton canvas (280 gsm) Organic Cotton canvas (280 gsm)
Item size:	38 x 42 x 10 cm
Handle:	Self material
Handle size:	70 x 2.5 cm
Technique:	Silkscreen (Max. 30 x 30 cm) Digital printing Heat transfer (Max. 15 x 15 cm / 30 x 30 cm)

SCALE 1:1

COTTON - STANDARD COLOUR

NATURAL

WHITE

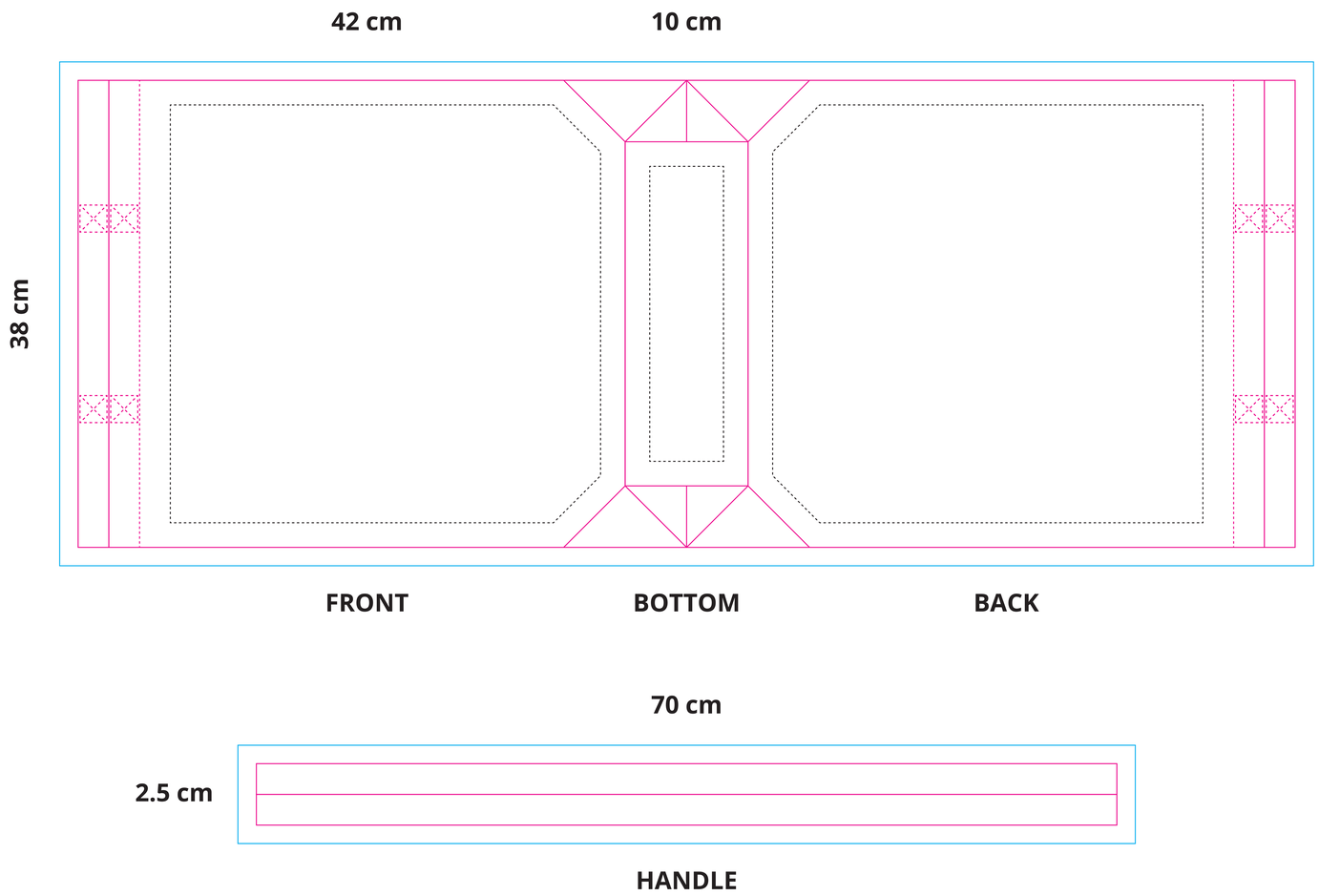

LEGEND:

- BLEED AREA
- FINISHED COMPONENT
- SAFE PRINT AREA